INSTALLATION

BUILT–IN CONSTRUCTION DETAILS

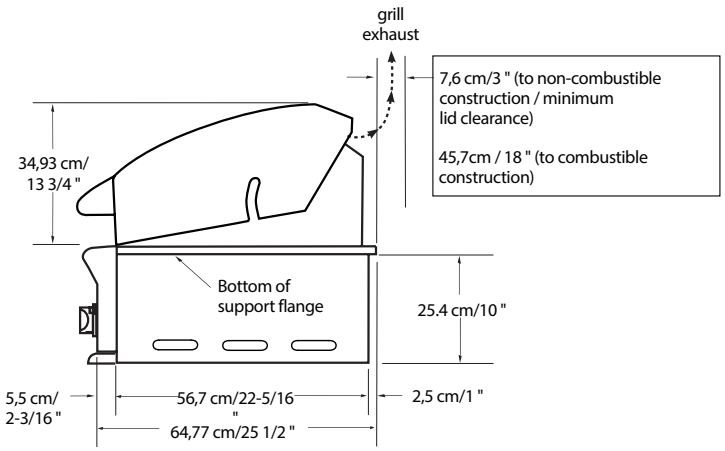

Standard layout for non-combustible enclosure:

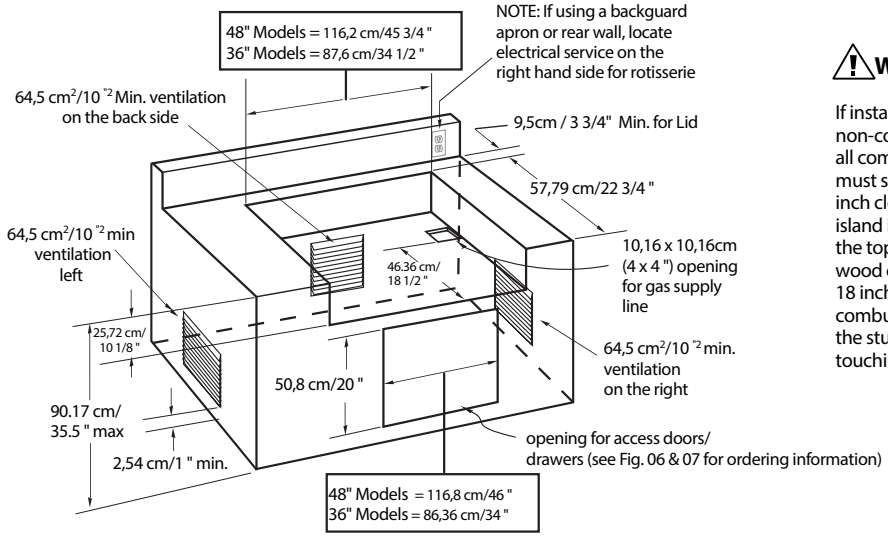

⚠WARNING!

If installing the grill into a non-combustible enclosure, all combustible construction must still be outside the 18 inch clearance zone. If your island is made of stucco over the top of wooden studs, the wood can not be inside the 18 inch clearance zone to combustible, even though the stucco is what is touching the grill area.

Layout for insulated jacket only - combustible enclosure:

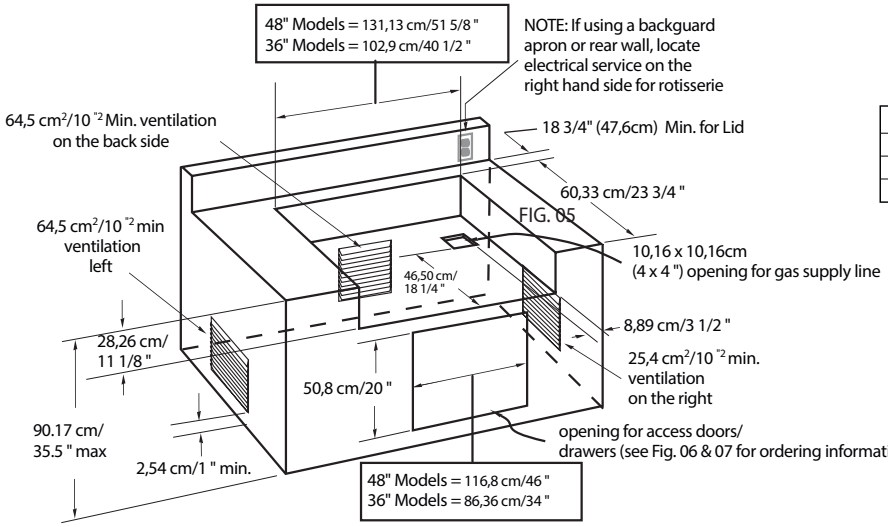

INSULATED JACKET	
Size	Part No.
36	70167
48	70172

FIG. 05