TWIN EAGLES 24” DROP-IN OUTDOOR COOLER
FEATURE SHEET

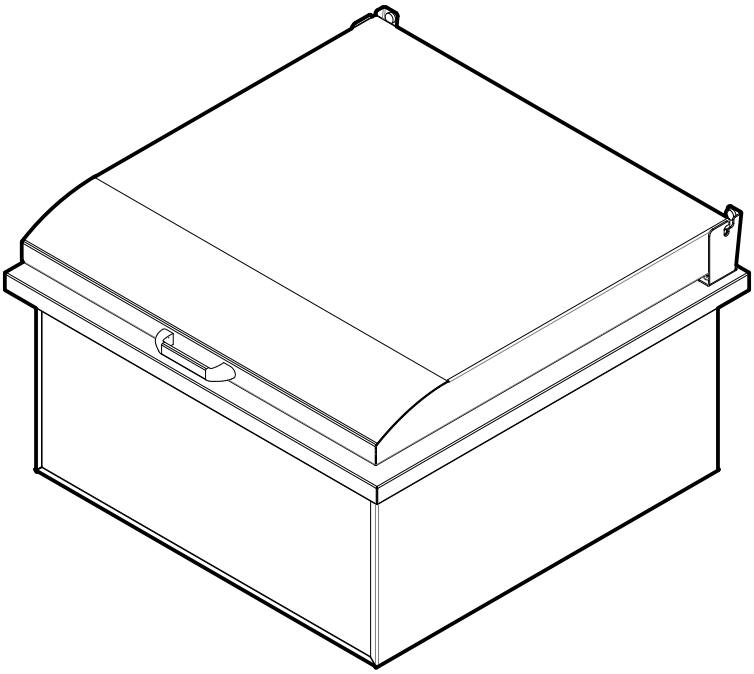

TEOC24D-B

FEATURES:

- 304 Stainless Steel welded construction
- Signature high polished accents
- Removable / sliding condiment tray
- Center drain
- Accommodates up to 60 bottles and 25 lbs of ice
- Removable lid
- Easy to install

SPECIFICATIONS:

- Overall Dimensions:

	TEOC24D-B
Height:	10.00” + DRAIN
Width:	24.00”
Depth:	24.00”
Ship Weight:	67 lbs

- Cutout Dimensions

Height:	n/a
Width:	22.75”
Depth:	22.75”

WARNING

PROP. 65 FOR CALIFORNIA RESIDENTS
Cancer and Reproductive Harm -- www.P65Warnings.ca.gov

AVERTISSEMENT

PROP. 65 POUR LES RESIDENTS DE LA CALIFORNIE
Cancer et Troubles de l’appareil Reproducteur -- www.P65Warnings.ca.gov

PN: 24139D 03/19